Hisense

life reimagined

USER'S OPERATION MANUAL

Before operating this unit, please read this manual thoroughly, and retain for future reference

HRTF497SW HRTF496SW

EN

English

Hisense

life reimagined

USER'S OPERATION MANUAL

Before operating this unit, please read this manual thoroughly, and retain for future reference

RS818N4TCE RS818N4TCF RS694N4TD1 RS694N4TF1

RS818N4TCE RS818N4TCF RS694N4TD1 RS694N4TF1

EN

English

Contents

Safety and warning formation……....2
Installing your new appliance……7
Description of the appliance……10
Display controls……11
Using your appliance…… 13
Cleaning and care……16
Helpful hints and tips……18
Troubleshooting…….. 20
Disposal of the appliance……21

Safety and warning information

For your safety and correct usage, before installing and first using the appliance, read this user manual carefully, including its hints and warnings. To avoid unnecessary mistakes and accidents, it is important to make sure that all people using the appliance are thoroughly familiar with its operation and safety features. Save these instructions and be sure that they remain with the appliance if it is moved or sold, so that anyone using it throughout its life, will be properly informed on its usage and safety notices.
For the safety of life and property, keep the precautions of these user's instructions as the manufacturer is not responsible for damages caused by omission.

Safety for children and others who are vulnerable people

● According to EN standard

This appliance can be used by children aged from 8 years and above and persons with reduced physical, sensory or mental capabilities or lack of experience and knowledge if they have been given supervision or instruction concerning use of the appliance in a safe way and understand the hazards involved. Children shall not play with the appliance. Cleaning and user maintenance shall not be made by children without supervision.

● According to IEC standard

This appliance is not intended for use by persons (including children) with reduced physical, sensory or mental capabilities, or lack of experience and knowledge, unless they have been given supervision or instruction concerning use of the appliance by a person being responsible for their safety.

- Keep all packaging away from children as there is risk of suffocation.
- If you are discarding the appliance, pull the plug out of the socket, cut the connection cable (as close to the appliance as you can) and remove the door to prevent children playing from suffering an electric shock or from closing themselves inside it.
- If this appliance, featuring a magnetic door seals, is to replace an older appliance having a spring lock (latch) on the door or lid, be sure to make the spring lock unusable before you discard the old appliance. This will prevent it from becoming a death trap for a child.

General safety

- WARNING —This appliance is intended to be used in household and similar applications such as

-staff kitchen areas in shops, offices and other working environments;
-farm houses and hotels, motels and other residential type environments;
-bed and breakfast type environments;
-catering and similar non-retail applications.

- WARNING — Do not store explosive substances such as aerosol cans with a flammable propellant in this appliance.
- WARNING — If the supply cord is damaged, it must be replaced by the manufacturer, its service agent or similarly qualified persons in order to avoid a hazard.
- WARNING — Keep ventilation openings, in the appliance enclosure or in the built-in structure, clear of obstruction.
- WARNING — Do not use mechanical devices or other means to accelerate the defrosting process, other than those recommended by the manufacturer.
- WARNING — Do not damage the refrigerant circuit.
- WARNING — Do not use electrical appliances inside the food storage compartments of the appliance, unless they are of the type recommended by the manufacturer.
- WARNING — The refrigerant and insulation blowing gas are flammable. When disposing of the appliance, do so only at an authorized waste disposal centre. Do not expose to flame.
- WARNING — When positioning the appliance, ensure the supply cord is not trapped or damaged.
- WARNING — Do not locate multiple portable socket-outlets or portable power supplies at the rear of the appliance.

Replacing the illuminating lamps

- WARNING— The illuminating lamps must not be replaced by the user! If the illuminating lamps is damaged, contact the customer helpline for assistance. This warning is only for refrigerators that contain illuminating lamps.

Refrigerant

The refrigerant isobutene (R600a) is contained within the refrigerant circuit of the appliance, a natural gas with a high level of environmental compatibility, which is nevertheless flammable. During transportation and installation of the appliance, ensure that none of the components of the refrigerant circuit becomes damaged.
The refrigerant (R600a) is flammable.
WARNING — Refrigerators contain refrigerant and gases in the insulation.

Refrigerant and gases must be disposed of professionally as they may cause eye injuries or ignition. Ensure that tubing of the refrigerant circuit is not damage prior to proper disposal.
It is hazardous for anyone other than an Authorized Service Person to service this appliance. In Queensland the Authorized Service Person Must hold a Gas Work Authorized for hydrocarbon refrigerants to carry out servicing or repairs which involve removal of covers.

WARNING: risk of fire

If the refrigerant circuit should be damaged:
-Avoid opening flames and sources of ignition.
-Thoroughly ventilate the room in which the appliance is situated.
It is dangerous to alter the specifications or modify this product in any way.
Any damage to the cord may cause a short circuit, fire, and/or electric shock.

Electrical safety

1. The power cord must not be lengthened.
2. Make sure that the power plug is not crushed or damaged. A crushed or damaged power plug may overheat and cause a fire.
3. Make sure that you can access the main plug of the appliance.
4. Do not pull the main cable.
5. If the power plug socket is loose, do not insert the power plug. There is a risk of electric shock or fire.
6. You must not operate the appliance without the interior lighting lamp cover.
7. The fridge is only applied with power supply of single phase alternating current of 220~240V/50Hz. If fluctuation of voltage in the district of user is so large that the voltage exceeds the above scope, for safety sake, be sure to apply A.C. Automatic voltage regulator of more than 350W to the fridge. The fridge must employ a special power socket instead of common one with other electric appliances. Its plug must match the socket with ground wire.

Daily use

- Do not store flammable gas or liquids in the appliance, There is a risk of an explosion.
- Do not operate any electrical appliances in the appliance (e. g. electric ice cream makers, mixers etc.).
- When unplugging always pull the plug from the mains socket, do not pull on the cable.
- Do not place hot items near the plastic components of this appliance.
- Do not place food products directly against the air outlet on the rear wall.
- Store pre-packed frozen food in accordance with the frozen food manufacturer’s instructions.

- The appliances manufactures storage recommendations should be strictly adhered to. Refer to relevant instructions for storage.
- Do not place carbonated or fizzy drinks in the freezer compartment as it creates pressure on the container, which may cause it to explode, resulting in damage to the appliance.
- Frozen food can cause frost burns if consumed straight from the freezer compartment.
- Do not place the appliance in direct sunlight.
- Keep burning candles, lamps and other items with naked flames away from the appliance so that do not set the appliance on fire.
- The appliance is intended for keeping food stuff and/or beverages in normal household as explained in this instruction booklet. You should take care when move it as the appliance is heavy.
- Do not remove nor touch items from the freezer compartment if your hands are damp/wet, as this could cause skin abrasions or frost/freezer burns.
- Never use the base, drawers, doors etc. to stand on or as supports.
- Frozen food must not be refrozen once it has been thawed out.
- Do not consume ice popsicles or ice cubes straight from the freezer as this can cause freezer burn to the mouth and lips.
- To avoid items falling and causing injury or damage to the appliance, do not overload the door racks or put too much food in the crisper drawers.
- **Note:**
  When one of the two doors is open, the LED lights is on. When the two doors keep at the same angle for 10 seconds, the LED lights is off.

Caution!

Care and cleaning

- Before maintenance, switch off the appliance and disconnect the mains plug from the mains socket.
- Do not clean the appliance with metal objects, steam cleaner, ethereal oils, organic solvents or abrasive cleansers.
- Do use a plastic scraper instead of a sharp objects to remove frost from the appliance.

Installation Important!

- For electrical connection carefully, follow the instructions given in this manual. Unpack the appliance and check if there are damages on it.
- Do not connect the appliance if it is damaged. Report possible damages immediately to the place you bought it. In this case retain packing.
- It is advisable to wait at least four hours before connecting the appliance to allow the oil to flow back in the compressor.
- Adequate air circulation should be around the appliance, lacking this leads to overheating. To achieve sufficient ventilation, follow the instructions relevant to installation.

- Wherever possible the back of the product should not be too close to a wall to avoid touching or catching warm parts (compressor) to prevent the risk of a fire, follow the instructions relevant to installation.
- The appliance must not be locate close to radiators or cookers.
- Make sure that the mains plug is accessible after the installation of the appliance.

Service

- Any electrical work required to do the servicing of the appliance should be carried out by qualified electrician or competent person.
- This product must be serviced by an authorized Service Center, and only genuine spare parts must be used.
  1) If the appliance is Frost Free.
  2) If the appliance contains freezer compartment.

Installing your new appliance

Before using the appliance for the first time, you should be informed of the following tips.

Warning!

For proper installation, this refrigerator must be placed on a level surface of hard material that is the same height as the rest of the flooring. This surface should be strong enough to support a fully loaded refrigerator.

The rollers, which are not castors, should be only used for forward or backward movement. Moving the refrigerator sideways may damage your floor and the rollers.

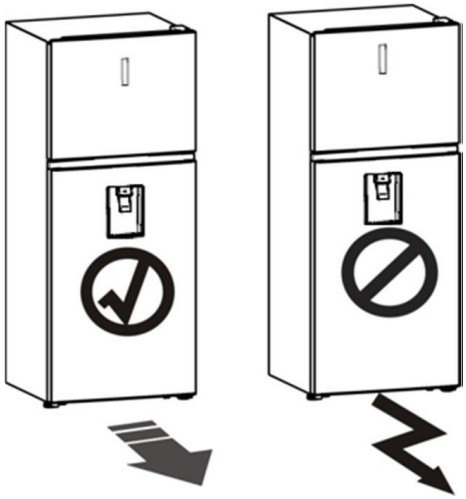

Ventilation of appliance

In order to improve efficiency of the cooling system and save energy, it is necessary to maintain good ventilation around the appliance for the dissipation of heat. For this reason, sufficient clear space should be available around the refrigerator.

Suggest: It is recommended to have 50mm of space from the back to the wall, at least 100mm from its top, at least 50mm from its side to the wall and a clear space in front to allow the doors to open 130°. As shown in follow diagrams.

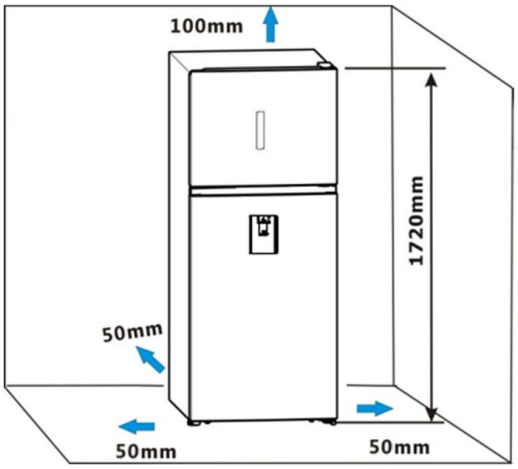

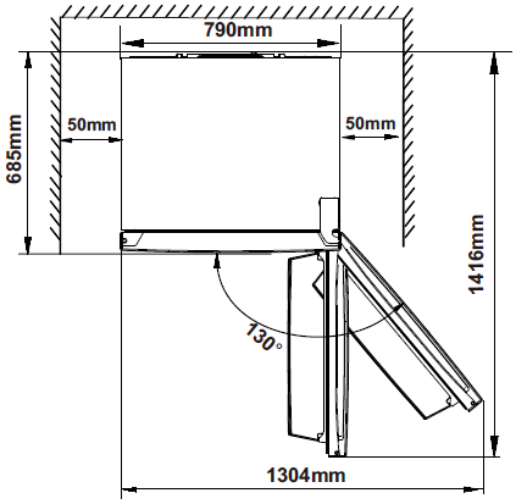

Note:

- This appliance performs well within the climate class from SN to T showed in the table below. It may not work properly if being left at a temperature above or below the indicated range for a long period.

Climate class	Ambient temperature
SN	+10°C to +32°C
N	+16°C to +32°C
ST	+16°C to +38°C
T	+16°C to +43°C

- Stand your appliance in a dry place to avoid high moisture.
- Keep the appliance out of direct sunlight, rain or frost. Stand the appliance away from heat sources such as stoves, fires or heaters.

Leveling of appliance

•For sufficient leveling and air circulating in the lower rear section of the appliance, the bottom feet may need to be adjusted. You can adjust them manually by hand or by using a suitable spanner.

•To allow the doors to self-close, tilt the top backwards by 10-15mm.

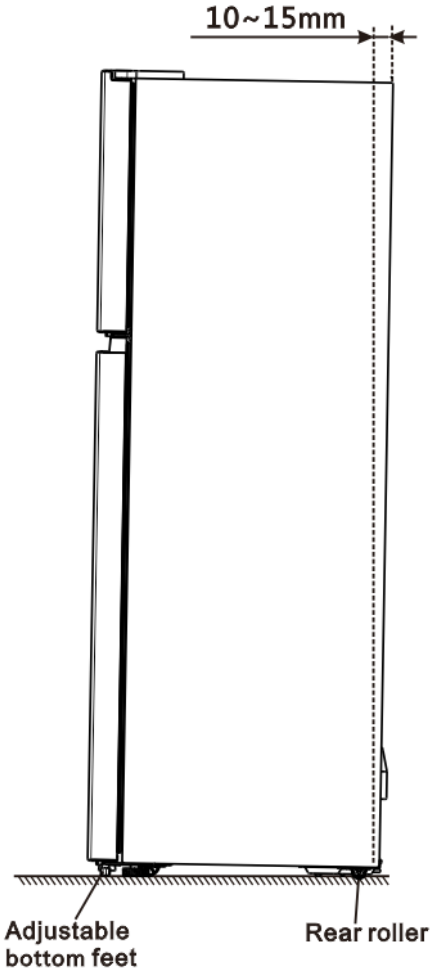

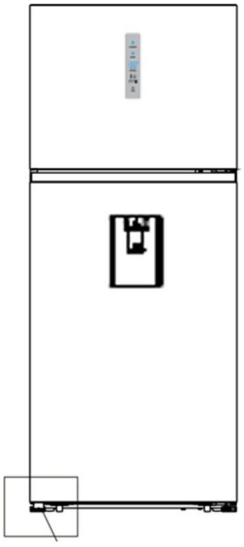

Adjustable bottom feet

Note:

•If required you may lay the refrigerator on its back in order to gain access to the base, you should rest it on soft foam packaging or similar material to avoid damaging the backboard of the refrigerator.

•Rubber supporting pad should be fastened to the lower base cover to steady this appliance.

1. Tilt appliance to find screw hole on the left of lower base cover.

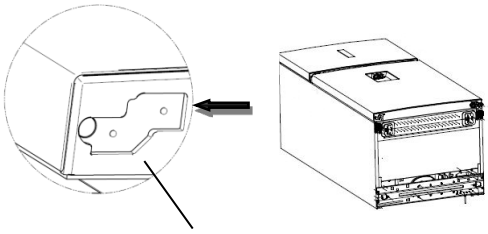

lower base cover

2. Put screw into the hole of rubber supporting pad.

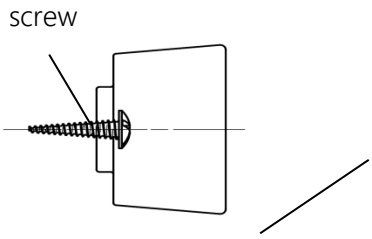

rubber supporting pad

3. Make screw in alignment with the hole on lower base cover. Fasten rubber supporting pad to the base cover firmly by a cross screwdriver (self-provided).

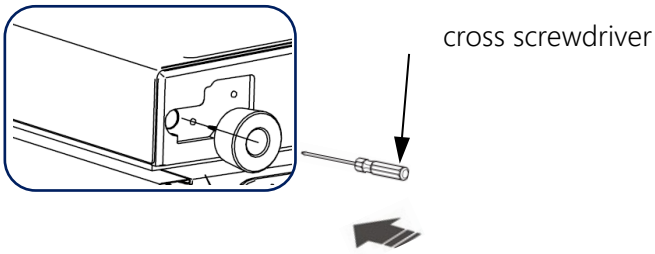

①

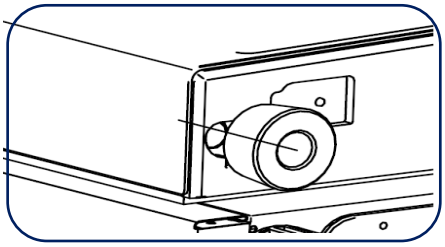

②

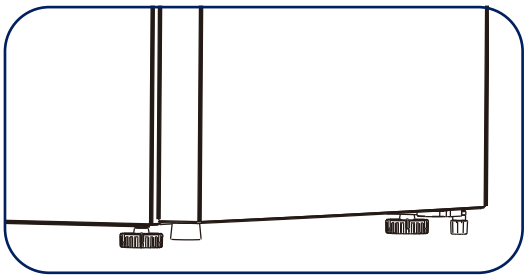

③

Description of the appliance

1. Freezer wind channel
2. Freezer shell
3. Ice tray part（optional）
4. Fresh Zone cover
5. Fresh Zone
   （“4” and “5” Or Fridge shell）
6. Fridge wind channel
7. Fridge shell
8. Crisper cover
9. Crisper
10. Adjustable bottom feet
11. Freezer door gasket
12. Freezer door
13. Freezer door rack
14. Fridge door gasket
15. Water tank
16. Small door rack
17. Lower door rack
18. Fridge door

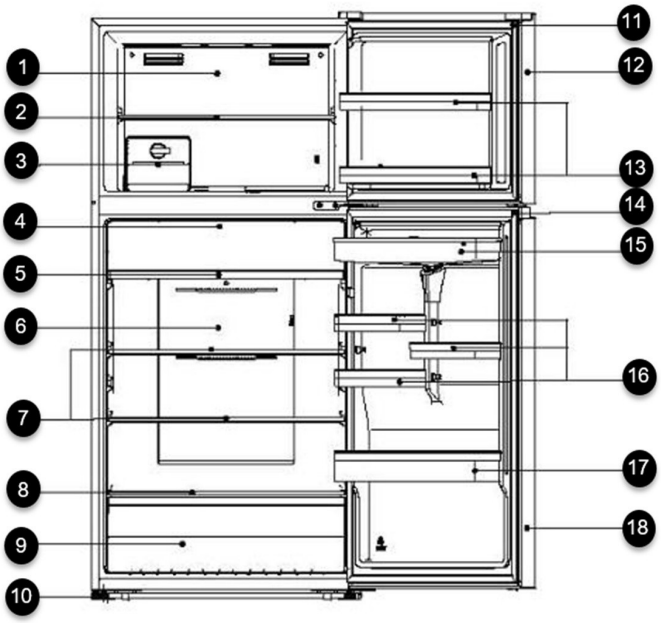

Note！

•Due to unceasing modification of our products, your refrigerator may be slightly different from this instruction manual, but its functions and using methods remain the same.

•To get the best energy efficiency of this product, please place all shelves, drawers and baskets on their original position as the illustration above.

Display controls

Display panel on door

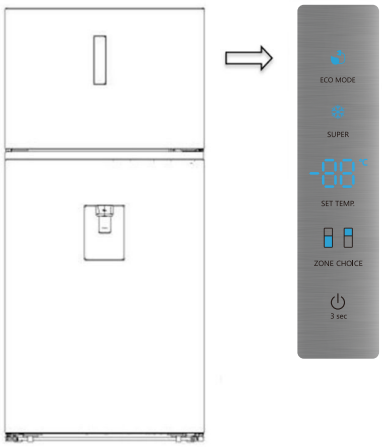

Display panel on door

Controlling the temperature

We recommend that when you start your refrigerator for the first time , the temperature for the refrigerator is set to 4℃, if you want to change the temperature, follow the instructions below.

Caution!

When you set temperature, you set an average temperature for the whole refrigerator cabinet. Temperature inside each compartment may vary from the temperature values displayed on the panel, depending on how much food you store and where you place them. Ambient temperature may also affect the actual temperature inside the appliance.

Fridge

●Press "ZONE CHOICE", when the " " light will turn on. Then press "SET TEMP", you can set fridge temperature between 2℃ and 8℃ as needed, and display panel will display corresponding values according to the following sequence.

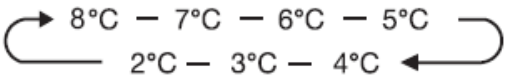

Freezer

●Press "ZONE CHOICE", when the " " light turns on. Then press "SET TEMP", you can set freezer temperature between -14℃and -24℃ as needed, and display panel will display corresponding values according to the following sequence.

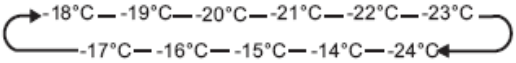

Super Freezer (❄)

Super Freezer will quickly lower the temperature within the freezer so food will freeze faster. This can lock in the vitamins and nutrients of fresh food and keep food fresh longer.

●You can press "SUPER" to get into super freezer mode.

●When super freeze mode is selected, the "❄" light will be illuminated and the freezer temperature will be set at -24℃.

●In case of the maximum amount of food to be frozen, please wait about 24h.

●Super freeze automatically switches off after 52 hours and then the freezer temperature setting will revert back to the previous setting.

Eco energy

This function makes the freezer work in a power saving mode which is useful for reducing energy consumption when you are away.

●You can press "ECO MODE" to get into economic energy mode.

● When economic energy Mode is activated，the “” light will be illuminated, the freezer temperature will be set at -17℃ and the fridge temperature will be set at 6℃.

Switch（ ⏻ ）

You can switch on or switch off your appliance by press this button.

●In the power on mode, press “ ⏻ ” for 3 seconds, after a buzzer sound，meanwhile the display panel will show “ OF ”，the appliance will be turned off.

●In the power off mode, press “ ⏻ ” for 3 seconds, after a buzzer sound， the appliance will be turned on.

Note： The appliance is powered on for the first time, the initial status is Power on mode.

Alarm

●When the door of fridge has been opened for over 2 minutes，the door alarm will sound. In case of door alarm，buzzer will sound 3 times every 1 minute and will stop alarming automatically after 8 minutes.

●To save energy, please avoid keeping the door open for a long time when using the appliance. The door alarm can also be cleared by closing the door.

Using your appliance

Your appliance has the accessories as the“ Description of the appliance ”showed in general, with this part instruction you can have the right way to use them. We recommend that you read through them carefully before using the appliance.

Door rack

●It is suitable for the storage of eggs, canned liquid, bottled drinks and packed food, etc. Do not place too many heavy things in the racks.

●Small rack on lower door can be placed at different heights according to your requirements. Please take food out of the shelf before lifting vertically to reposition.

Shelf in Refrigerator chamber

1.There are shelves in refrigerator chamber, and they can be taken out to be cleaned.

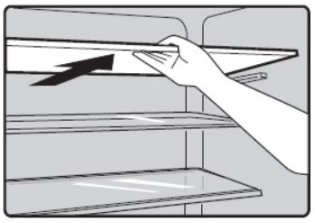

2.The crisper is suitable for storage of vegetables and fruit, etc.

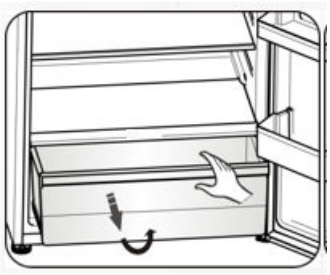

Freezer chamber

The freezer chamber is suitable for storage of foods required to be frozen, such as meat, ice.

Caution! Do not close refrigerator door when installing deep bracket, It may damage the unit.

Ensure that drink bottles are not left in the freezer for a longer time than needed as freezing liquid may cause the bottle to break.

Water Dispenser

The water dispenser, located in fridge door, is used for storing drinking water. This feature provides chilled water easily without opening refrigerator. You should be informed of following tips.

●Before using

Please clean the water dispenser parts before using this appliance for the first time.

1. Hold two sides of the water tank tightly, then pull up the water tank carefully by shaking up and down.
2. Unscrew the head, then clean it, and the inside of water tank (including large lid and small lid).
3. Dry it in natural way or using a dryer.

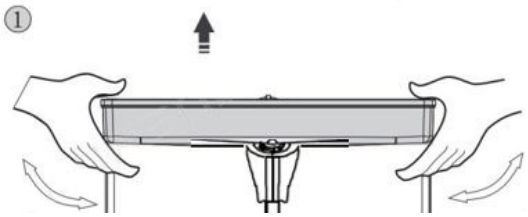

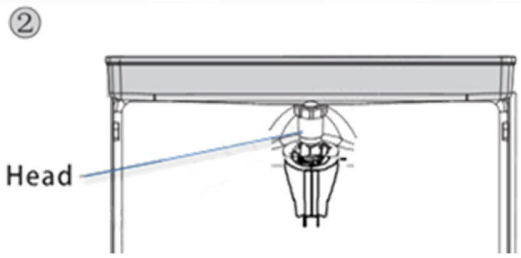

●Assembling

After cleaning, please assemble these parts together, with reverse sequence of cleaning procedure; and then fit them on the door according to the following procedure.

1. Insert the head into the hole on the door.

2. Fit the tank along the guides on the door.
3. Press down on the two side of the tank.
4.When you hear a click sound, that means the installation is completed.

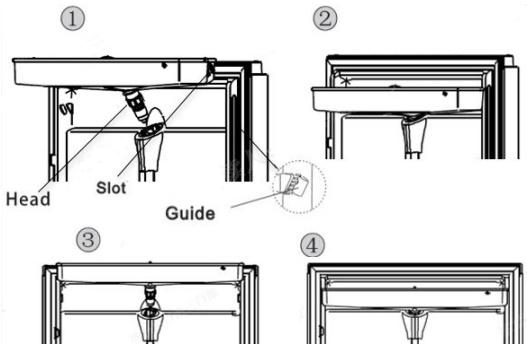

●Filling water

Before you fill the drinking water into the water tank, ensure that the water tank is steady and in a correct position.

Caution!

Fill with water up to 4L (which is suggested), and not above the level.

Otherwise, it may overflow when the lid is close.

We recommend that you fill the water by the following ways.

1. Remove the small lid and fill water from the inlet of the large lid.
2. Remove the cover of the tank, and then fill water inside directly.

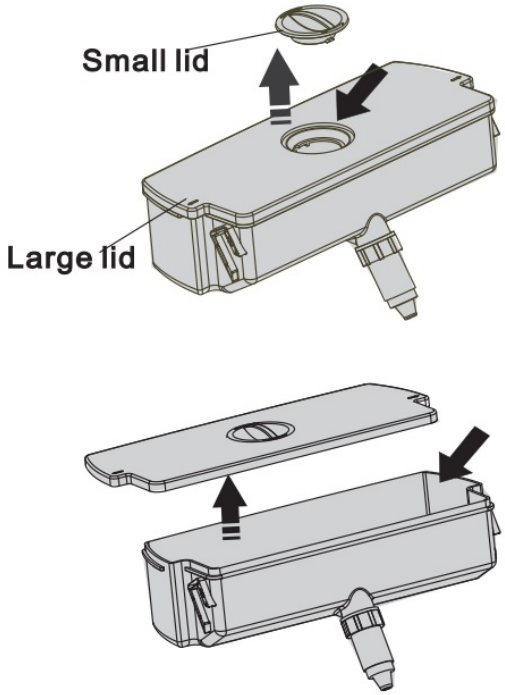

Warning!

--Don't touch other parts when filling water, which may cause water leakage.

--Other beverage (milk, juice, carbonated beverage *etc.*) were not suggested to be filled in except for drinking water, especially beverage including particles (which may result in function failure).

--Hot water was forbidden to be filled into the water tank.

●Receiving water

You should use the correct cups to receive water underneath the water dispenser.

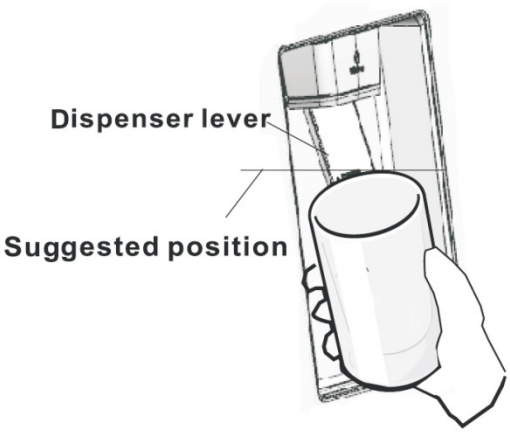

Warning!

--Don't push the water dispenser lever forward without a cup below since it may cause water spilling.

--To avoid cold air leaking out form cabinet, keep the water dispenser parts (especially the water storage box and head) still be installed even if the water dispenser was out of use.

●Cleaning

1. Put the water tank out of the door carefully, and then wash the tank, lid, and head lightly in water.
2. After you have successfully cleaned the appliance, you should dry it by natural drying or using the dryer.
3. If you have used the water dispenser for many times, the water in the receiving tank may drop on the floor, which may make your floor wet, and you should clean the tank with dry towel regularly before overflow.

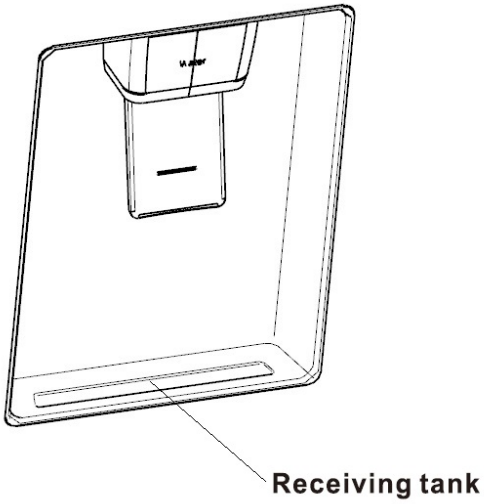

Cleaning and care

For hygienic reasons the appliance (including exterior and interior accessories) should be cleaned regularly (at least every two months).

Warning!

The appliance must not be connected to the mains during cleaning as there is a danger of electrical shock! Before cleaning switch the appliance off and remove the plug from the mains socket.

Exterior cleaning

Wipe the control panel with a clean, soft cloth.

- Spray water onto the cleaning cloth instead of spraying directly on the surface of the appliance. This helps ensure an even distribution of moisture to the surface.
- Clean the doors, handles and cabinet surfaces with a mild detergent and then wiped dry with a soft cloth.

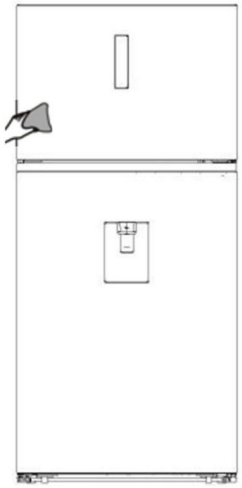

Caution!

- Don't use sharp objects as they are likely to scratch the surface.
- Don't use Thinner, Car detergent, Clorox, ethereal oil, abrasive cleansers or organic solvent such as Benzene for cleaning. They may damage the surface of the appliance and may cause fire.

Interior cleaning

You should clean the appliance interior regularly. It will be easier to clean when food stocks are low. Wipe the inside of the fridge freezer with a weak solution of bicarbonate of soda, and then rinse with warm water using a wrung-out sponge or cloth. Wipe completely dry before replacing the shelves and baskets. Thoroughly dry all surfaces and removable parts before putting them back into place.

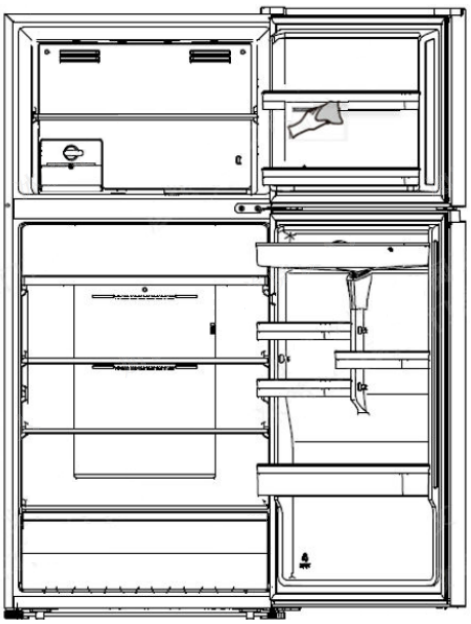

Although this appliance automatically defrosts, a layer of frost may occur on the freezer compartment's interior walls if the freezer door is opened frequently or kept open too long. If the frost is too thick, choose a time when the freezer is nearly empty and proceed as follow:

1. Remove existing food and accessories baskets, unplug the appliance from the mains power and leave the doors open. Ventilate the room thoroughly to accelerate the process.
2. When defrosting is completed, clean your freezer as described above.

Caution!

Do not use sharp objects to remove frost from the freezer compartment. Only after the interior is completely dry should the appliance be switched back on and plugged back into the mains socket.

Door seals cleaning

Take care to keep door seals clean. Sticky food and drinks can cause seals to stick to the cabinet and tear when you open the door. Clean seal with a mild detergent and warm water. Rinse and dry it thoroughly after cleaning.

Caution! Only after the door seals are completely dry should the appliance be powered on

Replacing the LED light:

Warning:

The LED light should be replaced by a competent person. If the LED light is damaged, contact the customer helpline for assistance. To replace the LED light, the below steps can be followed:

1. Unplug your appliance.
2. Remove light cover by pushing up and out.
3. Hold the LED cover with one hand and pull it with the other hand while pressing the connector latch.
4. Replace LED light and snap it correctly in place.

Helpful hints and tips

Energy saving tips

We recommend that you follow the tips below to save energy.

•Try to avoid keeping the door open for long periods in order to conserve energy.

Ensure the appliance is away from any sources of heat (Direct sunlight, electric oven or cooker etc.).

•Don‘t set the temperature colder than necessary.

•Don’t store warm food or evaporating liquid in the appliance.

•Place the appliance in a well ventilated and humidity free-room. Please refer to “Installing your new appliance” chapter.

•If the diagram shows the correct combination for the drawers, crisper and shelves, do not adjust the combination as this is designed to be the most energy-efficient configuration.

Hints for fresh food refrigeration

•Do not place hot food directly into the refrigerator or freezer, the internal temperature will increase resulting in the compressor having to work harder and will consume more energy.

•Do cover or wrap the food，particularly if it has a strong flavor.

•Place food properly so that air can circulate freely around it.

Hints for refrigeration

•Meat (All Types) wrapped in polythene: wrap and place on the glass shelf above the vegetable drawer. Always follow food storage times and use by dates suggested by manufacturers.

•Cooked food, cold dishes, etc.:

They should be covered and may be placed on any shelf.

•Fruit and vegetables:

They should be stored in the special drawer provided.

•Butter and cheese:

Should be wrapped in airtight foil or plastic film wrap.

•Milk bottles:

Should have a lid and be stored in the door racks.

Hints for freezing

•When first starting-up or after a period out of use, let the appliance run at least 2 hours on the higher settings before putting food in the compartment.

•Prepare food in small portions to enable it to be rapidly and completely frozen and to make it possible to subsequently thaw only the quantity required.

•Wrap up the food in aluminum foil or polyethylene food wraps which are airtight,

•Do not allow fresh，unfrozen food to touch the food which is already frozen to avoid temperature rise of the latter.

•Iced products，if consumed immediately after removal from the freezer compartment, will probably cause frost burns to the skin.

•It is recommended to label and date each frozen package in order to keep track of the storage time.

Hints for the storage of frozen food

•Ensure that frozen food has been stored correctly by the food retailer

•Once defrosted， food will deteriorate rapidly and should not be re-frozen.

•Do not exceed the storage period indicated by the food manufacturer.

Switching off your appliance

If the appliance needs to be switched off for an extended period, the following steps should be taken prevent mould on the appliance.

1. Remove all food.
2. Remove the power plug from the mains socket.
3. Clean and dry the interior thoroughly.
4. Ensure that all the doors are wedged open slightly to allow air to circulate.

Troubleshooting

If you experience a problem with your appliance or are concerned that the appliance is not functioning correctly, you can carry out some easy checks before calling for service, please refer to the following information.

Warning! Don't try to repair the appliance yourself. If the problem persists after you have made the checks mentioned below, contact a qualified electrician, authorized service engineer or the shop where you purchased the product.

Problem	Possible cause & Solution
Appliance is not working correctly	Check whether the power cord is plugged into the power outlet properly.
	Check the fuse or circuit of your power supply, replace if necessary.
	It is normal that the freezer is not operating during the defrost cycle, or for a short time after the appliance is switched on to protect the compressor.
Odours from the compartments	The interior may need to be cleaned
	Some food, containers or wrapping cause odours.
Noise from the appliance	The sounds below are quite normal: •Compressor running noises. •Air movement noise from the small fan motor in the freezer compartment or other compartments. •Gurgling sound similar to water boiling. •Popping noise during automatic defrosting. •Clicking noise before the compressor starts.
	Other unusual noises are due to the reasons below and may need you to check and take action: •The cabinet is not level. •The back of appliance touches the wall. •Bottles or containers fallen or rolling.
The motor runs continuously	It is normal to frequently hear the sound of the motor, it will need to run more when in following circumstances: •Temperature setting is set colder than necessary •Large quantity of warm food has recently been stored within the appliance. •The temperature outside the appliance is too high. •Doors are kept open too long or too frequently. •After your installing the appliance or it has been switched off for a long time.
A layer of frost occurs in the compartment	Check that the air outlets are not blocked by food and ensure food is placed within the appliance to allow sufficient

	ventilation. Ensure that door is fully closed. To remove the frost, please refer to the “Cleaning and care” chapter.
Temperature inside is too warm	You may have left the doors open too long or too frequently; or the doors are kept open by some obstacle; or the appliance is located with insufficient clearance at the sides, back and top.
Temperature inside is too cold	Increase the temperature by following the “controls panel” chapter.
Doors can’t be closed easily	Check whether the top of the refrigerator is tilted back by 10-15mm to allow the doors to self-close, or if something inside is preventing the doors from closing.

Disposal of the appliance

It is prohibited to dispose of this appliance as household waste.

Packaging materials

Packaging materials with the recycle symbol are recyclable. Dispose of the packaging into a suitable waste collection container to recycle it.

Before disposal of the appliance

1. Pull out the mains plug from the mains socket.
2. Cut off the power cord and discard with the mains plug.

Warning! Refrigerators contain refrigerant and gases in the insulation. Refrigerant and gases must be disposed of professionally as they may cause eye injuries or ignition. Ensure that tubing of the refrigerant circuit is not damage prior to proper disposal.

	Correct Disposal of this product
	This symbol on the product or in its packing indicates that this product may not be treated as household waste. Instead, it should be taken to the appropriate waste collection point for the recycling of electrical and electronic equipment. By ensuring this product is disposed of correctly, you will help prevent potential negative consequences for the environment and human health, which could otherwise be caused by the inappropriate waste handling of this product. For more detailed information about the recycling of this product, please contact your local council your household waste disposal service, or the shop where you purchased the product.

To avoid contamination of food, please respect the following instructions:
- Opening the door for long periods can cause a significant increase of the temperature in the compartments of the appliance.
- Clean regularly surfaces that can come in contact with food and accessible drainage systems.
- Store raw meat and fish in suitable containers in the refrigerator, so that it is not in contact with or drip onto other food.
- Two-star frozen-food compartments are suitable for storing pre-frozen food, storing or making ice-cream and making ice cubes.
- One-, two- and three- star compartments are not suitable for the freezing of fresh food.

Order	Compartments TYPE	Target storage temp.[°C]	Appropriate food
1	Fridge	+2~+8	Eggs, cooked food, packaged food, fruits and vegetables, dairy products, cakes, Drinks and other foods which are not suitable for freezing.
2	(***)*-Freezer	≤-18	Seafood(fish, shrimp, shellfish), freshwater aquatic products and meat products(recommended time is 3 months – nutrition values and taste decrease with time), suitable for frozen fresh food.
3	***-Freezer	≤-18	Seafood(fish, shrimp, shellfish), freshwater aquatic products and meat products(recommended time is 3 months – nutrition values and taste decrease with time). Not suitable for freezing fresh food.
4	**-Freezer	≤-12	Seafood(fish, shrimp, shellfish), freshwater aquatic products and meat products(recommended time is 2 months – nutrition values and taste decrease with time). Not suitable for freezing fresh food.
5	*-Freezer	≤-6	Seafood(fish, shrimp, shellfish), freshwater aquatic products and meat products(recommended time is 1 month – nutrition values and taste decrease with time). Not suitable for freezing fresh food.
6	0-star	-6~0	Fresh pork, beef, fish, chicken, some packaged processed foods, etc.(Recommended to eat within the same day, preferably not later than 3 days).
7	Chill	-2~+3	Fresh/frozen pork, beef, fish, chicken, freshwater aquatic products, etc.(7 days below 0°C and above 0°C is recommended

			for consumption within that day, preferably no more than 2 days). Seafood(less than 0 for 15 days, it is not recommended to store above 0°C).
8	Fresh Food	0~+4	Fresh pork, beef, fish, chicken, cooked food, etc.(Recommended to eat within the same day, preferably no more than 3 days).
9	Wine	+5~+20	red wine, white wine, sparkling wine etc.

Note: please store different foods according to the compartments or target storage temperature of your purchased products.

- If the refrigerating appliance is left empty for long periods, switch off, defrost, clean, dry, and leave the door open to prevent mould developing within the appliance.

Water dispenser cleaning (special for water dispenser products):

- Clean water tanks if they have not been used for 48h; flush the water system connected to a water supply if water has not been drawn for 5 days.

WARNING! Food needs to be packed in bags before putting into the refrigerator, and liquids need to be packed in bottles or capped containers to avoid the problem that the product design structure is not easy to clean.

Hisense

life reimagined