KM 362-1 G

Gas cooktop
with a mono wok burner for special applications.

- Simple controls – single-handed operation via rotary dial control
- Professional design – 585mm wide stainless steel trough
- Versatile – 4 burners

Heating type	
Heating type	Gas
Construction type	
Independent of cooker	•
Design	
Cast iron pot rests (matt black enamelled)	•
Cooking zone details	
Number of cooking zones	4
Cooking zone	
Position	front left
Type	Single wok burner
Rating in W	4000
Position	rear left
Type	Economy burner
Rating in W	1000
Position	rear right
Type	Economy burner
Rating in W	3000
Position	front right
Type	Standard burner
Rating in W	1750
User convenience	
Operation via knobs	•
Electronic ignition with single-hand operation	•
Safety	
GasStop	•
Technical data	
Dimensions in mm (width)	585
Dimensions in mm (depth)	515
Cutout dimensions in mm (width) with surface-mounted installation	560
Cutout dimensions in mm (depth) with surface-mounted installation	490
Voltage in V	230
Weight in kg	13
Length of supply lead in m	2.0
Standard accessories	
Mains cable	•
Jets for liquid gas	•
Wok ring	•

KM 362-1 G

Gas cooktop
with a mono wok burner for special applications.

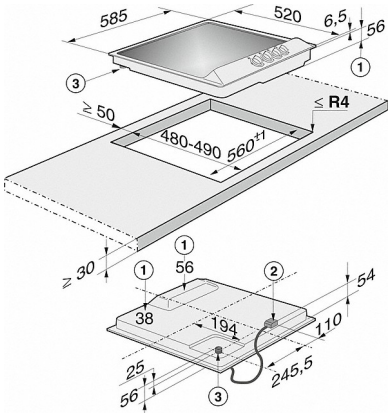

KM360-1G, KM362-1G (Installation drawing)

1) Building-in depth
2) Mains connection box
3) Gas connection R 1/2 ISO 7-1 (DIN2999)
Installation note:
Space behind hob 50 mm. Space to wall or tall unit at side of hob 100 mm.
This hob can be fitted above a Miele oven, in which case the worktop must be a least 40 mm thick